INSTALLATION, SERVICE AND MAINTENANCE INSTRUCTIONS

LEAKAGE BUTTERFLY VALVE

A470

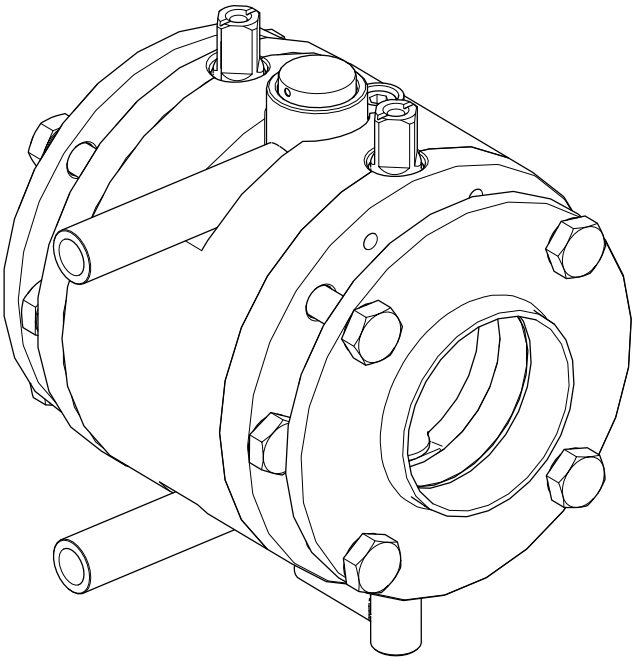

10.011.32.0030

Original Instructions

10.011.30.02EN

(C) 2026/02

EC Declaration of Conformity

INOXPA S.A.U.
Telers, 60
17820 - Banyoles (Spain)

assumes responsibility for declaring that

Machine:	**VALVE**
Model:	**LEAK-PROOF BUTTERFLY VALVE**
Type:	**A470**
Size:	**DN 25 - DN 100 / OD 1" - OD 4" / SMS 25 - SMS 104**
Serial number:	**IXXXXXXXXX** to **IXXXXXXXXX** **XXXXXXXXXIINXXX** to **XXXXXXXXXIINXXX**

complies with the applicable provisions in the following directives:

Machinery Directive 2006/42/EC[1]
Pressure Equipment Directive 2014/68/EU[2,3]
Regulation (EC) No 1935/2004
Regulation (EC) No 2023/2006
ATEX Directive 2014/34/EU

II 2G Ex h IIB T6...T3 Gb
II 2D Ex h IIIB T85ºC...T200ºC Db

II 2G Ex h IIB T6...T3 Gb X[5]
II 2D Ex h IIIB T85ºC...T200ºC Db X[5]

II 3G Ex h IIB T6...T3 Gb X[5]
II 3D Ex h IIIB T85ºC...T200ºC Db X[5]

and with the following harmonised standards and/or regulations:

EN ISO 12100:2010, EN ISO 13732-1:2008, EN 1672-2:2005+A1:2009, EN ISO 14159:2008, EN 19:2016, EN 12266-1:2012, EN 1127-1:2019[4],EN 13237:2012[4], EN 15198:2007[4], EN ISO 80079-36:2016[4], EN ISO 80079-37:2016[4], EN IEC 60079-0:2018[4]

The technical file was prepared by the signatory of this document.

A copy of the technical file is held by the notified body, L.C.I.E., with reference number 0081.

David Reyero Brunet
Technical Office Manager
1st of June, 2026

Document: 10.011.30.03EN
Revision: (B) 2026/06

1) A470 with pneumatic drive
2) A470 with manual and pneumatic drive
3) A470 DN 25 Designed and manufactured in accordance with good technical practices
A470 DN>25 Category I equipment I. Conformity assessment procedure used: Module A
4) A470 with specific explosion protection marking and with one or more of the following options:
- Pneumatic drives: INOXPA pneumatic actuators, series A940
- INOXPA C-TOP eX control unit or BURKERT control unit.
- Inductive position sensors.
5) Specific conditions of use. Consult the instruction manual of the supplier of the control unit and/or inductive position sensors.

Declaration of conformity

INOXPA S.A.U.
Telers, 60
17820 - Banyoles (Spain)

assumes responsibility for declaring that

Machine:	**VALVE**
Model:	**LEAK-PROOF BUTTERFLY VALVE**
Type:	**A470**
Size	**DN 25 - DN 100 / OD 1" - OD 4" / SMS 25 - SMS 104**
Serial number:	**IXXXXXXXXX** to **IXXXXXXXXX** **XXXXXXXXXIINXXX** to **XXXXXXXXXIINXXX**

complies with the applicable provisions of the following regulations:

Supply of Machinery (Safety) Regulations 2008[1]
Pressure Equipment (Safety) Regulations 2016[2.3]
Equipment and Protective Systems Intended for Use in Potentially Explosive Atmospheres Regulations 2016[4]

Ex II 2G Ex h IIB T6...T3 Gb
II 2D Ex h IIIB T85ºC...T200ºC Db

Ex II 2G Ex h IIB T6...T3 Gb X[5]
II 2D Ex h IIIB T85ºC...T200ºC Db X[5]

Ex II 3G Ex h IIB T6...T3 Gb X[5]
II 3D Ex h IIIB T85ºC...T200ºC Db X[5]

and with the following harmonised standards:

EN ISO 12100:2010, EN ISO 13732-1:2008, EN 1672-2:2005+A1:2009, EN ISO 14159:2008, EN 19:2016, EN 12266-1:2012, EN 1127-1:2019[4],EN 13237:2012[4], EN 15198:2007[4], EN ISO 80079-36:2016[4], EN ISO 80079-37:2016[4], EN IEC 60079-0:2018[4]

The technical file was prepared by the signatory of this document.

A copy of the technical file is held by the notified body, L.C.I.E., with reference number 0081.

David Reyero Brunet
Technical Office Manager
1st of June, 2026

UK CA

Document: 10.011.30.04EN
Revision: (A) 2026/06

1) A470 with pneumatic drive
2) A470 with manual and pneumatic drive
3) A470 DN 25 Designed and manufactured in accordance with good technical practices
A470 DN>25 Category I equipment I. Conformity assessment procedure used: Module A
4) A470 with specific explosion protection marking and with one or more of the following options:
- Pneumatic drives: INOXPA pneumatic actuators, series A940
- INOXPA C-TOP eX control unit or BURKERT control unit.
- Inductive position sensors.
5) Specific conditions of use. Consult the instruction manual of the supplier of the control unit and/or inductive position sensors.

1. Table of Contents

1. Table of Contents
2. Generalities
2.1. Instructions manual ... 5
2.2. Compliance with the instructions ... 5
2.3. Warranty ... 5
3. Safety
3.1. Warning symbols ... 6
3.2. General safety instructions ... 6
4. General Information
4.1. Description ... 8
4.2. Application ... 8
4.3. Scope of ATEX certification ... 8
5. Installation
5.1. Reception of the valve ... 9
5.2. Transport and storage ... 9
5.3. Identification of the valve ... 9
5.4. Location ... 11
5.5. General installation ... 11
5.6. Checking and review ... 12
5.7. Welding ... 12
5.8. Connecting the air to actuator ... 14
6. Start-up
6.1. Operation with two-position handle ... 17
7. Operating problems
8. Maintenance
8.1. General considerations ... 19
8.2. Maintenance ... 19
8.3. Cleaning ... 20
8.4. Disassembly and assembly the valve ... 22
8.5. Disassembly and assembly of the leakage butterlfy valve between flanges A470 ... 22
8.6. Disassembly and assembly of the manual drive ... 24
8.7. Disassembly and assembly of the pneumatic drive ... 25
8.8. Disassembly and assembly of the leak detector ... 27
8.9. Disassembly and assembly of the adapter kit of the control head C-TOP S ... 28
8.10. Fitting the seat seal ... 29
8.11. Valve position ... 29
9. Technical Specifications
9.1. Valve ... 30
9.2. Actuator ... 30
9.3. Materials ... 30
9.4. Sizes available ... 31
9.6. Tightening torque ... 31
9.5. Weight of the leakage butterfly valve between flanges A470 ... 31
9.7. Dimensions of the leakage butterfly valve between flanges A470 with manual drive ... 32
9.8. Dimensions of the leakage butterfly valve between flanges A470 with pneumatic drive ... 32
9.9. Dimensions of the leakage butterfly valve A470 with pneumatic drive and C-TOP S ... 33
9.10. Exploded drawing and parts list of the leakage butterfly valve between flanges A470 ... 34
9.11. Exploded drawing and parts list of the manual drive ... 35
9.12. Exploded drawing and parts list of the pneumatic drive ... 36
9.13. Exploded drawing and parts list of the leak detector ... 37

2. Generalities

2.1. INSTRUCTIONS MANUAL

This manual contains information about the reception, installation, operation, assembly and maintenance of the leakage butterfly valve between flanges A470.

Carefully read the instruction before starting the valve, familiarize yourself with the installation, operation and correct use of the valve and strictly follow the instructions. These instructions should be kept in a safe location near the installation area.

The information published in the instruction manual is based on updated data.

INOXPA reserves the right to modify this instruction manual without prior notice.

2.2. COMPLIANCE WITH THE INSTRUCTIONS

Not following the instructions may impose a risk for the operators, the environment and the machine, and may cause the loss of the right to claim damages.

This non-compliance may cause the following risks:
- failure of important machine/plant functions,
- failure of specific maintenance and repair procedures,
- possible electrical, mechanical and chemical hazards,
- the risk to the environment due to the type of substances released.

2.3. WARRANTY

The conditions of the warranty are specified in the General Sales Condition that has been delivered at the time of placing your order.

The machine may not undergo any modification without prior approval from the manufacturer.
For your safety, only use original spare parts and accessories. The usage of other parts will relieve the manufacturer of any liability.
Changing the service conditions can only be carried out with prior written authorization from INOXPA.

Please do not hesitate to contact us in case of doubts or if further explanations are required regarding specific data (adjustments, assembly, disassembly, etc.).

3. Safety

3.1. WARNING SYMBOLS

Safety hazard for people in general and/or for the equipment

Important instructions for protection against explosions

ATTENTION Important instruction to prevent damage to the equipment and/or its function

3.2. GENERAL SAFETY INSTRUCTIONS

Read the instruction manual carefully before installing and starting the valve. Contact INOXPA in case of doubt.

3.2.1. During installation

Always take into account the Technical Specifications of chapter 9.
The installation and use of the valve should always be in accordance with applicable regulations in regard to health and safety.
Before starting up the valve, check that it is assembled correctly and its shaft is perfectly aligned. Incorrect alignment and/or excessive stress during coupling can cause serious mechanical problems in the valve.

Earth the unit to ensure electrical continuity between pipes and valve in order to reduce the static electricity risk.

3.2.2. During operation

Always take into account the Technical Specifications of chapter 9.
NEVER exceed the specified limit values.
NEVER touch the valve and/or piping that is in contact with the fluid during operation. If the process involves hot products there is a risk of burns.
The valve contains parts that move in a linear fashion. Do not place hands or fingers in the valve closing area. This can cause serious injury.

NEVER exceed the threshold values for operating conditions in explosive atmospheres. The valve and/or actuator was selected based on the operating conditions specified by the customer. INOXPA rejects any liability for any potential damage caused by using the valve in different operating conditions to those specified by the user.

Avoid product leakage if using the valve with flammable liquids. Use leak sensors to discharge product leaks to a closed system or outside the classified zone. Use material suitable for the classified zone.

3.2.3. During maintenance

Always take into account the Technical Specifications of chapter 9.
NEVER disassemble or remove the valve until the pipes have been emptied. Bear in mind that the fluid in the pipe may be hazardous or extremely hot. Consult the regulations in effect in each country for these cases.
Inside the actuator, there is a spring with an applied load. The steps specified in this manual must be followed when performing maintenance operations to avoid injury.
Do not leave loose parts on the floor.

All work to remove and/or fit the valve and/or actuator carried out in explosive atmospheres or in locations where they may form must be performed by personnel authorised to work in explosive atmospheres.

4. General Information

4.1. DESCRIPTION

The leakage butterfly between flanges A470 allows a safe separation of not compatible fluids by two discs which drive simultaneously. When the two discs are closed, a chamber between two discs is formed. This chamber allows any the detection of any leakage caused by the disc seat seal defect or wear.

This valve allows a CIP or SIP clean using the upper detector like a cleaning product supply pipe or steam supply pipe and the bottom detector like drainage.

The valve can be operated by a manual drive or by a pneumatic drive.

4.2. APPLICATION

The leakage butterfly between flanges A470 valves, whether manually or automatically operated, can be used in most liquid product applications in the food-processing, pharmaceutical and chemical industries that require safe separation between products.

4.3. SCOPE OF ATEX CERTIFICATION

Only valves with specific explosion protection marking that are equipped with one or more of the following options comply with the essential health and safety requirements of ATEX Directive 2014/34/EU:

- Pneumatic drives: INOXPA pneumatic actuators, series A940.
- INOXPA C-TOP eX control unit or BURKERT control unit.
- Inductive position sensors.

5. Installation

5.1. RECEPTION OF THE VALVE

INOXPA is not liable for any deterioration of the material caused by its transport or unpacking.

Check that the valve and/or actuator are suitable for the operating conditions specified in the order and for the classified explosive atmosphere.

When receipt the valve, check to see whether all the parts listed on the delivery slip are present:
- complete valve,
- its components if any are supplied,
- quick installation guide.

INOXPA inspects all its equipment before packaging. However, it cannot guarantee that the merchandise arrives at the user intact.

When unpacking the valve:
- remove any possible traces of packaging from the valve or its parts,
- inspect the valve or the parts that comprise it for possible damage incurred during shipping,
- take all possible precautions against damage to the valve and its components.

5.2. TRANSPORT AND STORAGE

The buyer or user shall be liable for assembly, installation, start-up and operation of the valve.

Take all possible precautions when transport and storage the valve to avoid damage it and its components.

5.3. IDENTIFICATION OF THE VALVE

The valve and/or actuator is marked with a serial number for identification purposes. Valves complying with ATEX Directive 2014/34/EU also come with specific explosion protection marking. Indicate the serial number in every document when referring to the valve.

The specific explosion protection marking for the valve and/or actuator is:

II 2G Ex h IIB T6...T3 Gb
II 2D Ex h IIIB T85ºC...T200ºC Db

II 2G Ex h IIB T6...T3 Gb X
II 2D Ex h IIIB T85ºC...T200ºC Db X

II 3G Ex h IIB T6...T3 Gb X
II 3D Ex h IIIB T85ºC...T200ºC Db X

Whereby X indicates the specific conditions of use. Consult the instruction manual of the supplier of the control unit and/or inductive position sensors in such cases.

The temperature class and maximum surface temperature depend on the product temperature and ambient temperature.

Temperature class for explosive gas atmospheres:

Temperature class	Product temperature (in process or cleaning)	Ambient temperature
T6	≤ 60ºC	-20ºC a 40ºC
T5	≤ 75ºC	
T4	≤ 110ºC	
T3	≤ 140ºC	

Maximum surface temperature for explosive dust atmospheres:

Temperature class	Product temperature (in process or cleaning)	Ambient temperature
T85ºC	≤ 85ºC	-20ºC a 40ºC
T100ºC	≤ 100ºC	
T125ºC	≤ 125ºC	
T200ºC	≤ 200ºC	

Valve codes:

VA	47	0 -	00	06	52	050	
						Size	
						025	DN 25, OD 1”
						040	DN 40
						045	OD 1½”
						050	DN 50, OD 2”
						063	OD 2½”
						065	DN 65
						076	OD 3”
						080	DN 80
						100	DN 100, OD 4”
					Material of seat seals		
					52	EPDM	
					78	FPM	
				Material			
				06	1.4404 (AISI 316L)		
			Connexions				
			00	weld/weld			
		Standard pipe					
		0	DIN				
		1	OD				
	Type						
	47	leakage butterfly valve between flanges A470					
Product family							
VA	valve						

5.4. LOCATION

Place the valve leaving enough space around it to realize easily the dismantling, the inspection and the review the valve as well as in order to access to the actuator air connection's device for valves with automatic actuation even when the valve is operating. Consult in chapter 5.7. Welding the required minimum distances. The installation should allow that the removable parts are could remove easily.

5.5. GENERAL INSTALLATION

After the location of the valve is defined, the valve can be joined to the pipe by welding the valve housing or using fittings.

Earth the unit to ensure electrical continuity between pipes and valve in order to reduce the static electricity risk.

In case of joining the valve to the pipe by fittings do not forget the seals and tighten the unions properly.
During installation, the valve avoids using excessive force and pay special attention to:

- vibrations that may be produced on the facility,
- thermal dilation that the pipe may undergo when hot fluids are circulating,
- the weight that the pipe can support,
- excessive welding current.

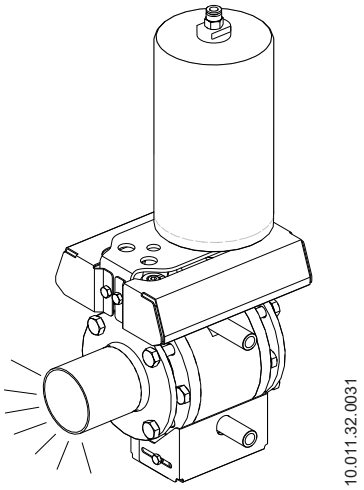

The valve is designed to be installed horizontally and with leak sensors in accordance with the figure below:

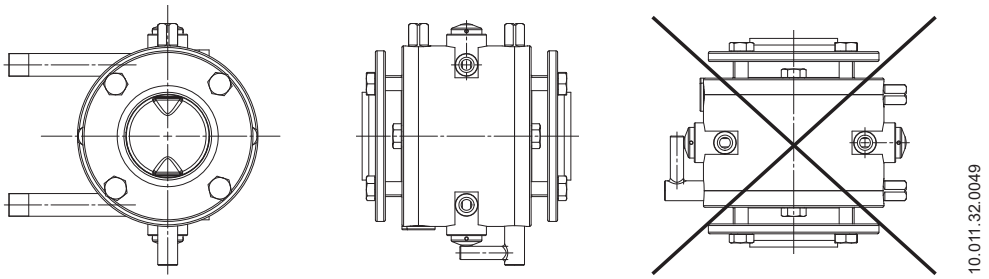

5.6. CHECKING AND REVIEW

Perform the following checks before using the valve:

- open and close the valve several times to ensure that it works properly and check that the butterfly smoothly connects to the coupling.
- if the valve is fitted with a pneumatic drive, apply the compressed air several times to make sure that the valve carries out the opening and closing action without difficulty.

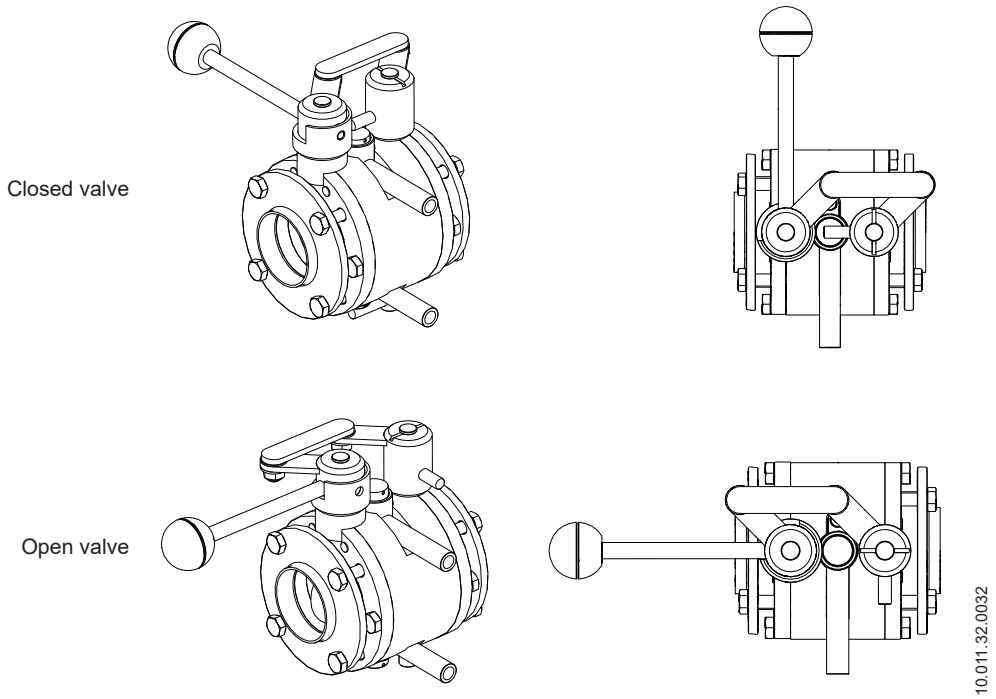

5.7. WELDING

Welding work should only be done by qualified persons who are trained and equipped with the necessary equipment to perform this kind of work.

Wherever possible, perform welding work in atmospheres not classified as explosive. If this is not possible, welding work in potentially explosive atmospheres must be performed by personnel qualified to do so.

For the welding works on the SMS size values, consult the size equivalences in chapter 8.2.3. Spare parts.

5.7.1. Leakage butterfly between flanges valve A470 welding/welding

To perform the welding works:

- disassemble the screws and nuts which join the flanges to the half bodies and remove the flanges. For more information, consult the chapter 8.5. Disassembly and assembly of the leakage butterfly valve between flanges A470,
- weld the flanges to the pipes maintaining the distance indicated in the following table, dimension A. This will allow an axial movement of the internal part of the valve necessary to disassemble the internal pieces.

DN	A (mm)
25 - 1”	106
40 - 1½”	106
50 - 2”	106
65 - 2½”	106
80 - 3”	106
100 - 4”	106

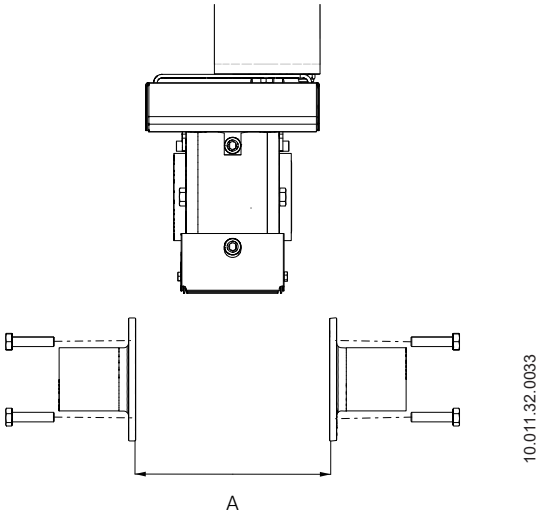

- mount the valve following the instructions indicated in chapter 8.5. Disassembly and assembly of the leakage butterfly valve between flanges A470.

5.7.2. Double butterfly valve between flanges A470 with pneumatic drive

Any actuator not supplied by INOXPA must always comply with the specifications of ATEX Directive 2014/34/EU and the specifications of the supplier.

To perform the welding works on valves with the pneumatic drive should be maintained, in addition to the dimensions mentioned in chapters above, a distance which allows disassembly the pneumatic drive and the control head. The minimum distances that must be kept are indicated in the following table, dimension B for valves with a pneumatic drive or dimension C for valves with pneumatic drive and control head.

DN	B (mm)	C (mm)
25 - 1”	292	465
40 - 1½”	320	493
50 - 2”	327	500
65 - 2½”	335	508
80 - 3”	393	566
100 - 4”	403	576

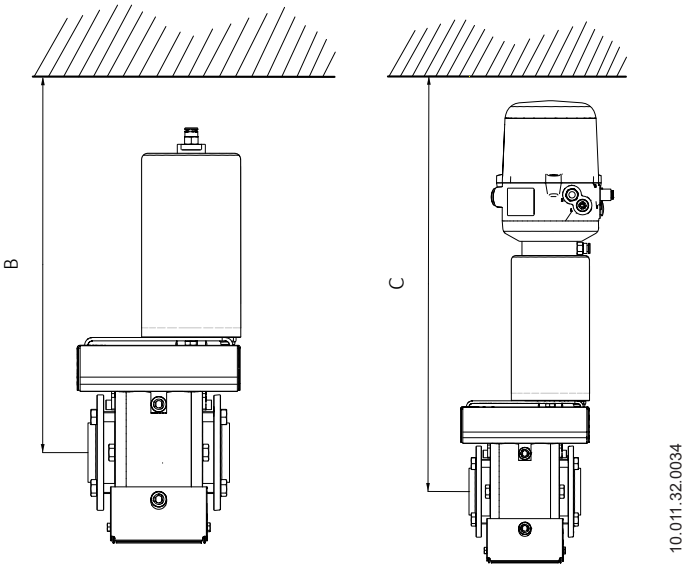

5.8. CONNECTING THE AIR TO ACTUATOR

To perform the air connection to the actuator:

- Connect and check the air connections (G 1/8'' thread for tubing Ø6 mm).
- Mind the quality of the compressed air according to the specifications described in chapter 9. Technical Specifications.

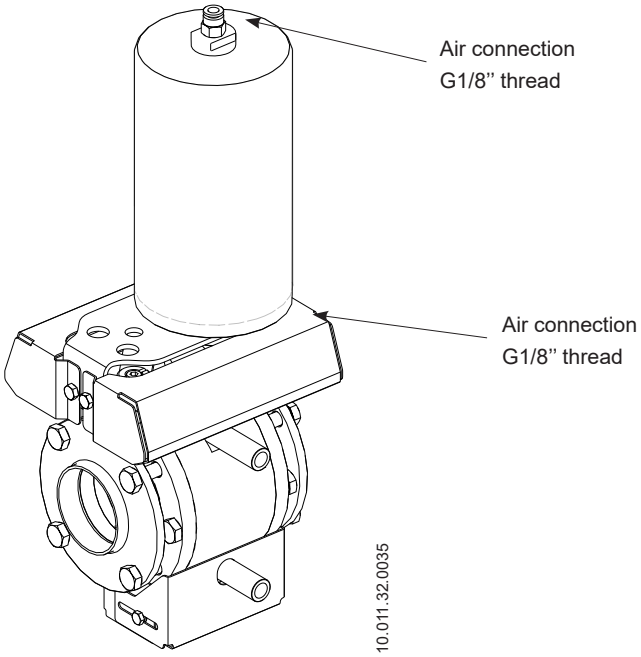

6. Start-up

Read carefully the instructions in chapter 5. Installation before start-up the valve.

Before start-up, the persons in charge must be duly informed about how the valve works and the safety instructions to follow. This instruction manual will be available to personnel at all times.

Any actuator not supplied by INOXPA must always comply with the specifications of ATEX Directive 2014/34/EU and the specifications of the supplier.

Before putting the valve or the actuator into service the following must be taken into consideration:

- check that the piping and valve are completely free of possible traces of welding slag or other foreign particles. Clean the system if necessary,
- check the valve moves smoothly. If necessary, lubricate it with special grease or soapy water,
- check for possible leaks verifying that all pipes and their connections are hermetic,
- if the valve has been supplied with an actuator, make sure that the alignment of the valve shaft and the actuator shaft enables smooth movement,
- check that the compressed air pressure at the inlet of the actuator matches what is indicated in chapter 9. Technical Specifications,
- consider the quality of the compressed air, according to the specifications described in chapter 9. Technical Specifications,
- Activate the valve.

ATTENTION

Do not modify the operating parameters for which the valve has been designed without prior written authorisation from INOXPA.
Do not touch the moving parts of the coupling between the actuator and the valve when the actuator is connected to the compressed air supply.

Do not modify the operating parameters for which the valve or actuator was designed without written authorisation from INOXPA.
The valve and/or actuator was selected based on the operating conditions specified by the customer. INOXPA rejects any liability for any damage that may occur should the purchaser have provided incomplete or incorrect information such as liquid type, viscosity, potentially explosive area classification, the gas generating the potentially explosive atmosphere, and so on.

¡Burn hazard! Do not touch the valve or the pipes when hot fluids are circulating or when cleaning and/or sterilization are being carried out.

When the valve is operated and there is a product in the line, it is expelled through the leak detector. The product quantity that can come out depends on the line pressure. The product must be directed to properly exit through the leak detector and thus avoid hazards for the operators because the liquid can be hot, be corrosive, danger, etc.

Check that there is not any plug on the detectors before start-up the valve.

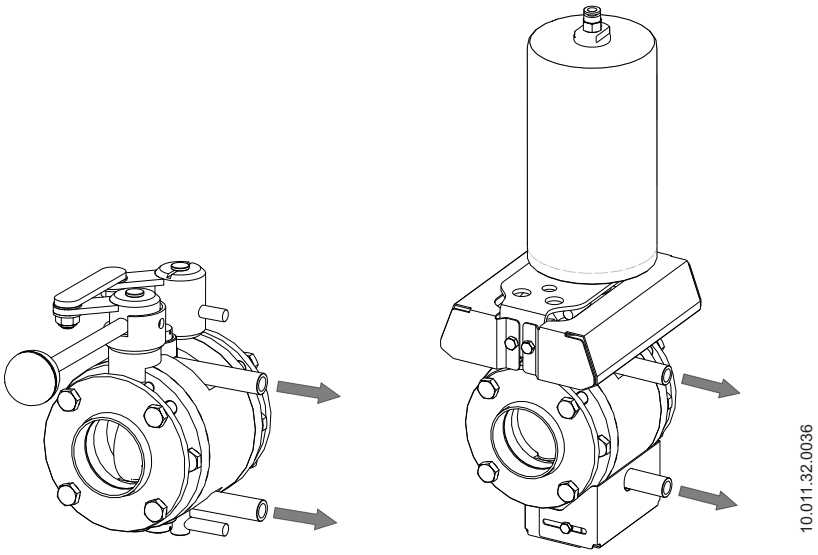

The valve location must not be accessible during the valve operation. Otherwise, the operator must take de protection measures to avoid entrapment hazards.

Entrapment hazard
for fingers and hands.

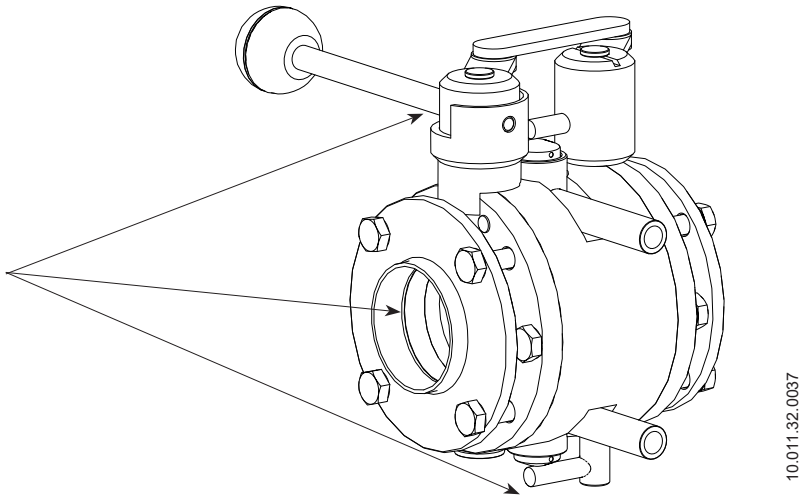

6.1. OPERATION WITH TWO-POSITION HANDLE

The two-position handle allows operating the valve manually in the on/off position. To manoeuvre the handle follow the following instructions:

- pull the handle outwards,
- while pulling the handle turn it 90º.

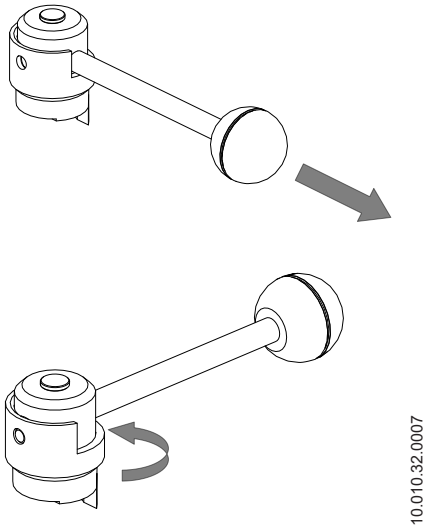

7. Operating problems

External leak. The product is leaking at the shaft

Product leak by the leakage detector

Internal product leak (closed valve)

The valve is jerking

The valve does not open/close

Water hammer

PROBABLE CAUSES		SOLUTIONS
The seal has completely worn or is deteriorated		- Replace the seal - Change the seals for others made of a different material more suitable to the product
Wear and tear or rupture of the leakage detector's seals		- Replace the seals
Normal wear and tear of the seat seals		- Replace the seals
Premature wearing of seals	Seal worn or affected by the product	- Change the seals for others made of a different material more suitable to the product - Tighten loose parts - Clean frequently - Decrease valve opening/closing frequency
	Excessive pressure on the line	
	Work temperature too high (nuts and screws)	
	Loss of impenetrability (vibrations)	
	High manoeuvre periodicity (num. operations/tour)	
The seals are jamming up		- Lubricate with soapy water or lubricant suitable with the gasket material and the product
The actuator does not operate the valve efficiently		- Check the supply pressure of the compressed air - Replace with a larger sized actuator
Excessive pressure on the line		- Check the installation pressure and adjust whenever necessary
Deformation of the seal		- Replace the seals with others of different quality, if prematurely deteriorated
Incorrect operation of the actuator		- Replace from NC to NO
Worn actuator components		- Check the actuator
Dirt in actuator		- Check the compressed air pressure
The valve closes too fast		- Adjust the closing speed of the actuator with a flow regulator

8. Maintenance

8.1. GENERAL CONSIDERATIONS

This valve, just like any other machine, requires maintenance. The instructions in this chapter cover the maintenance of the valve, the identification and replacement of the spare parts and the disassembly and assembly of the valve. The instructions are aimed at maintenance personnel and those responsible for the supply of spare parts.

Read carefully the chapter 9. Technical Specifications.
Maintenance work should only be done by qualified persons who are trained and equipped with the necessary equipment to perform this kind of work.
All replaced material should be duly disposed or recycled according to the directives in effect in each area.
Make sure that the pipes are not under pressure before starting maintenance work.

Only personnel qualified to work in potentially explosive atmospheres may fit or remove the valve and/or actuator.
If the valve is supplied without a manual drive, actuator, control head or inductive position sensors, and the customer wishes to install them, they must comply with the specifications of ATEX Directive 2014/34/EU.

8.2. MAINTENANCE

To perform maintenance properly is recommended:
- periodic inspection of the valve and its components,
- keeping an operational record of each valve writing down any problems,
- always having spare replacement seals in stock.

Pay special attention to the hazard warnings indicated in this manual during the performance of the maintenance work.

Do not touch the moving parts when the actuator is connected to the compressed air.
The valve and the pipes must never be under pressure during maintenance.
¡Burn hazard! Do not touch the valve or the pipes when hot fluids are circulating or when cleaning and/or sterilization are being carried out.
Keep in mind that the springs are not protected during the disassembly of the actuator for its maintenance or its repair.

8.2.1. Maintenance of the seals

REPLACING SEAL	
Preventive maintenance	Replace after 12 months
Maintenance after a leak	Replace at the end of the process
Planned maintenance	Regularly check the absence of leaks and the smooth operation of the valve. Keep a record of the valve's maintenance. Use statistics for planning inspections.
Lubrication	During assembly, apply lubricants that are suitable with the material of which the seat seal is made

SEAL COMPONENT	LUBRICANT	NLGI DIN 51818 Class
FPM	klübersynth UH 1 64-2403	3
EPDM / FPM	PARALIQ GTE 703	3

The time interval between each preventive maintenance may vary in accordance with the work conditions to which the valve is subject: temperature, pressure, number of operations per day, type of cleaning solutions used, etc.

8.2.2. Storage

The valves should be stored in a closed area under the following conditions:
- temperature between 15ºC y 30ºC,
- air humidity < 60%.

Storage of the equipment in the open air is NOT allowed.

8.2.3. Spare parts

When ordering spare parts for valves and/or actuators that operate in potentially explosive atmospheres, you must specifically state that these valves and/or actuators operate in an ATEX zone and provide the characteristics of the said zone. If this information is not stated, INOXPA rejects any liability for the valve and/or actuator that is being used with unsuitable parts for the classified zone where it is installed.

To request spare parts is necessary to indicate the type of valve, the size, the fabrication number, the position and the description of the part which can be found in chapter 9. Technical Specifications.

The space parts of the valve are being centralized on the DIN EN 10357 Series A and ASTM A269/270. In the following table, there are equivalences between the different types of size.

DIN EN 10357 serie A	ASTM A269/270	SMS
DN 25	-	-
DN 40	-	-
DN 50	-	-
DN 65	-	-
DN 80	-	-
DN 100	-	104
-	OD 1”	25
-	OD 1½”	38
-	OD 2”	51
-	OD 2½”	63,5
-	OD 3”	76
-	OD 4”	101,6

8.3. CLEANING

The use of aggressive cleaning products such as caustic soda and nitric acid may burn the skin.
Wear rubber gloves during all cleaning procedures.
Always wear protective goggles.

Please consider the presence or potential formation of potentially explosive atmospheres before starting work to remove and fit the valve and/or actuator.
Clean the outside of the equipment to prevent too much dust, fuel or explosive from building up on its outer surface. Nothing more than 2 mm thick should ever be allowed to build up.

8.3.1. CIP (clean-in-place) cleaning

If the valve is installed in a system with a CIP process its disassembly will not be required. EPDM is the standard seal material that will be used for CIP cleaning, both in alkaline mediums and in acid mediums. The materials of the seal HNBR and FPM are not recommended.

Two types of solutions can be used for CIP processes:

a. **alkaline solution**: 1% by weight of caustic soda (NaOH) a 70ºC (150ºF). To make this solution:
   1 kg NaOH + 100 l H_2O[1] = cleaning solution
   2,2 l NaOH 33% + 100 l H_2O = cleaning solution

b. **acid solution**: 0,5% by weight of nitric acid (HNO_3) a 70ºC (150ºF). To make this solution:
   0,7 l HNO_3 53% + 100 l H_2O = cleaning solution

1) only use chlorine-free water to mix with the cleaning agents

ATTENTION

Check the concentration of the cleaning solutions. An incorrect concentrations may lead to the deterioration of the valve seals.

To remove any traces of cleaning products, ALWAYS perform a final rinse with clean water at the end of the cleaning process.

Clean the entire interior and exterior of the valve before starting disassembly and assembly tasks.

8.3.2. Automatic SIP (sterilization-in-place)

Sterilization with steam is applied to all equipment including the pigging.

ATTENTION

Do NOT start the equipment during the sterilization with steam.
The parts and the materials will not be damaged if the indications specified in this manual are observed.
No cold fluid can enter the equipment until the temperature of the equipment is lower than 60°C (140°F).

Maximum conditions during the SIP process with steam or superheated water:

a. maximum temperature:	140ºC / 284ºF
b. maximum time:	30 min
c. cooling:	sterile air or inter gas
d. materials:	EPDM (the materials HNBR and FPM are not recommended)

8.3.3. Cleaning of the intermediate chamber

The double butterfly valve between flanges A470 allows a CIP or SIP clean of the intermediate chamber in order to avoid any pollution type.
To do these cleaning you should close the valve and introduce the cleaning product or steam by the upper detector and drain it by the bottom detector.

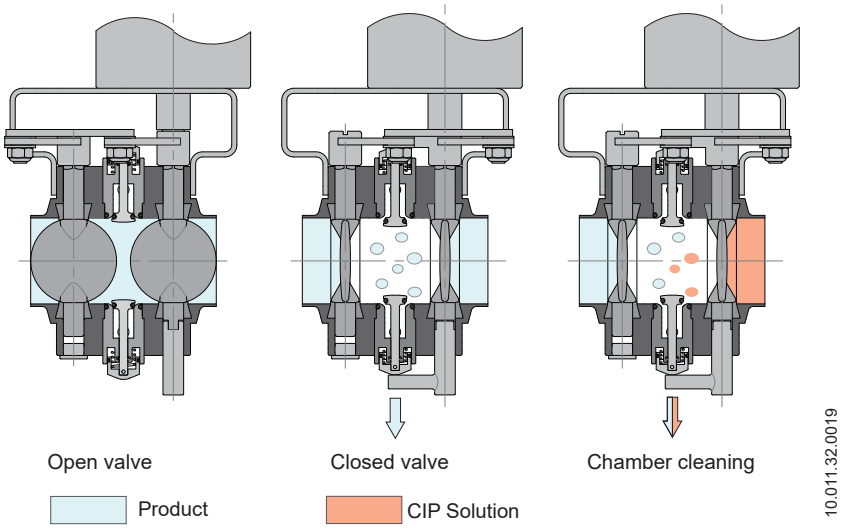

8.4. DISASSEMBLY AND ASSEMBLY THE VALVE

Proceed with caution. Personal injury can occur.
Always disconnect the compressed air before starting to disassemble the valve.
Never disassemble the valve clamps directly without reading the instructions carefully, since the actuator contains a spring inside it with an applied load.
Valve and actuator assembly and disassembly should only be done by qualified persons.

Only personnel qualified to work in potentially explosive atmospheres may fit or remove the valve, actuator and/or control head.

The following tools are needed in order to disassembly and assembly the valve and the drives:
- two crescent spanners 13 mm and a flat screwdriver for the valve
- a 4 mm allen key for the manual drive and leakage detector
- a crescent spanner 10 mm and a allen key 8 mm for the pneumatic drive

8.5. DISASSEMBLY AND ASSEMBLY OF THE LEAKAGE BUTTERLFY VALVE BETWEEN FLANGES A470

8.5.1. Disassembly

Avoid removing the valve in a zone defined as potentially explosive, since the valve discs will be left electrically isolated when the valve has no actuation.

1. Loosen the screws (23) which join the flanges (02A) to the half-bodies (02).
2. Separate the flanges (02A).
3. Remove the valve bottom plug (07) which is situated at the disc bottom part (03).
4. Loosen the screw (23B) and remove the lower actuation (17B) of the disc (03A).
5. Loosen the screws (23C) which join the leak detectors (58) to the valve body (01).
6. Loosen the screws (23A) that join the half-bodies (02) to the valve body (01).
7. Separate the half-bodies (02).

8. Remove the half-bodies seal (20) from the half-bodies (02).
9. Remove the guide-bushings (17,17A) from the discs (03,03A).
10. Remove the discs (03,03A) with the seat seals (05) from the half-bodies (02).
11. Remove the seat seals (05) from the discs (03,03A).

8.5.2. Assembly

1. Lubricate the discs (03,03A) and the seat seals (05) with the grease indicated in chapter 8.2.1. Maintenance of the seals.
2. Fit the discs (03,03A) to the seat seals (05) as indicated in chapter 8.9. Fitting the seat seal.
3. Place the guide bushings (17,17A) to the shafts discs (03,03A).
4. Place the half-bodies seal (20) to the half-bodies (02).
5. Mount the two discs and the seat seals assembly between the half-bodies (02) and the body (01).
6. Place the screws (23A) and screw them crosswise according to the tightening torque value indicated in chapter 9.6. Tightening torque and check that the seat seal (05) and the guide bushings (17,17A) are positioned correctly.
7. Place the leak detectors (58) on the body (01) and fix them with the screws (23C). Ensure that the upper part of the leak detectors (58) has grease.
8. Place the bottom actuation (17B) perpendicular to the disc (03A) and tighten the screw (23B).
9. Place the bottom plug (07) on the lower part of the disc shaft (03).
10. Place the flanges (02A) to the half-bodies (02).
11. Place the screws (23) which join the flanges (02A) to the half-bodies (02) and tighten them according to the tightening torque value indicated in chapter 9.6. Tightening torque.
12. Leave the discs (03,03A) in the open position to facilitate installing the valve.

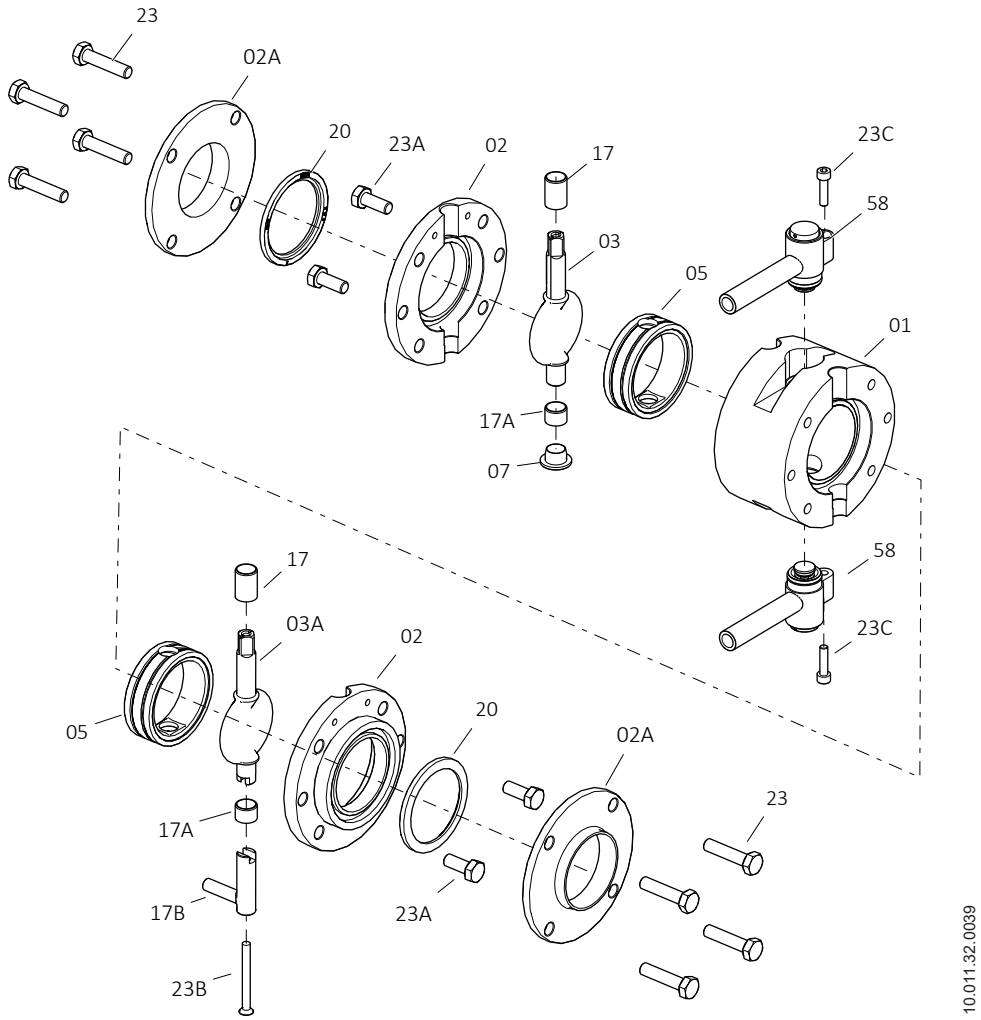

8.6. DISASSEMBLY AND ASSEMBLY OF THE MANUAL DRIVE

If the valve comes supplied without a manual drive and the customer installs a manual drive not supplied by INOXPA, it must comply with the specifications of ATEX Directive 2014/34/EU.
Avoid removing the actuator in a zone defined as potentially explosive, since the valve disc will be left electrically isolated when the valve has no actuation.

8.6.1. Disassembly

1. Remove the plugs (07B) from the manual connecting rod (04) and the assembly handle connecting rod (04A).
2. Loosen the screws (23D,23E) and remove the connecting rods (04,04A) with the handle assembly.
3. Remove the handle guide (11).
4. Loosen and remove the nuts (26).
5. Remove the drive arm (04B), the bushings (17C) and the washers (25).
6. Remove the plugs (07A) from the valve half-bodies (02).

8.6.2. Assembly

1. Place the discs (03,03A) in the open position.
2. Place the plugs (07A) on the valve half-bodies (02).
3. Place the handle guide (11) on the disc shaft (03).
4. Place the manual connecting rod (04) and the lever assembly connecting rod (04A) on the discs shafts (03,03A) as shown in the following figure and fix them with the screws (23D,23E).

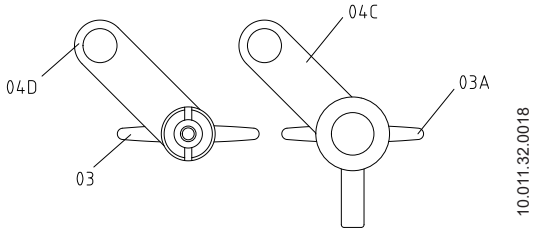

5. Place the plugs (07B) on the manual connecting rod (04) and the lever assembly connecting rod (04).
6. Place the bushings (17D), the washers (25) and the drive arm (04B).
7. Place the nuts (26) and tighten them.

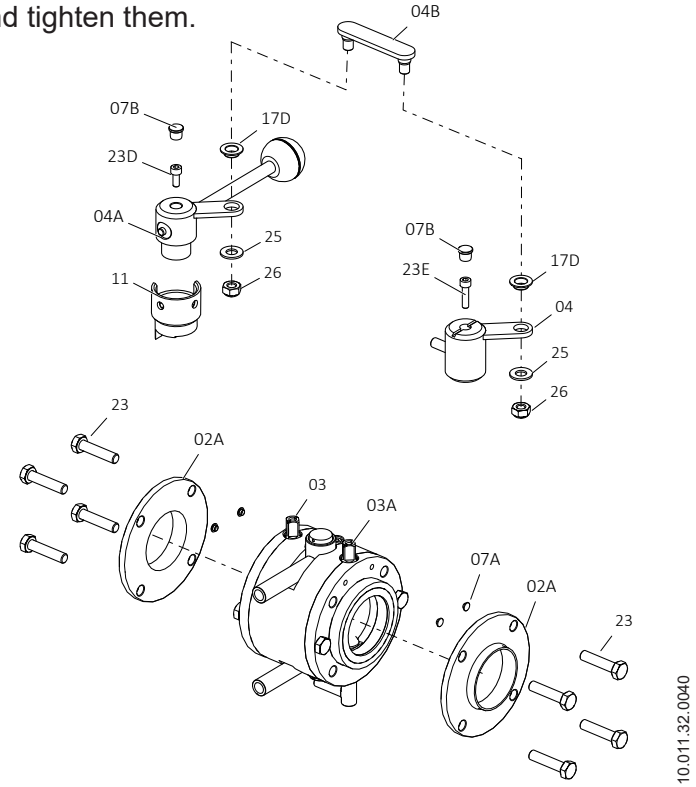

8.7. DISASSEMBLY AND ASSEMBLY OF THE PNEUMATIC DRIVE

If the valve comes supplied without a pneumatic drive and the customer installs a pneumatic drive not supplied by INOXPA, it must comply with the specifications of ATEX Directive 2014/34/EU.
Avoid removing the actuator in a zone defined as potentially explosive, since the valve disc will be left electrically isolated when the valve has no actuation.

8.7.1. Disassembly

1. Disconnect the compressed air from the actuator.
2. Disassemble the upper protectors (57), unscrewing the screws (23J) that join them to the actuator support (21).
3. Remove the screw (23I) that joins the bottom protectors (57A,57B) and the bottom leak detectors (58) to the valve body (01).
4. Unscrew the screws (23K) to separate the fixed bottom protector (57A) from the mobile (57B).
5. Loosen the screws (23) which join the flanges (02A) to the half-bodies (02).
6. Separate the flanges (02A).
7. Remove the screws (23G) which join the actuator support (21) to the half-bodies (02).
8. Remove the pin (50) which joins the connecting rod (04C) to the actuator (10).
9. Remove the screw (23H) which joins the connecting rod (04D) to the disc shaft (03).
10. Separate the assembly formed by support/actuator/connecting rod from the rest of the valve.
11. Remove the screws (23F) which join the support (21) to the actuator (10).
12. Separate the support (21) from the actuator (10).
13. Loosen and remove the nuts (26).
14. Remove the bushings (17C) and the washers (25).

8.7.2. Assembly

1. Place the discs (03,03A) in the open position.
2. Place the actuator connecting rod (04C) on the disc shaft (03A) as shown in the figure10.011.32.0018 in the previous section.
3. Place the connecting rod (04D) on the disc shaft (03) as shown in the figure 10.011.32.0018 in the previous section and fix it with the screw (23H).
4. Place the bushings (17C), the washers (25) and the drive arm (04B).
5. Place the nuts (26) and tighten them.
6. Supply compressed air to the actuator.
7. Place the support (21) and the actuator (10) on the actuator connecting rod (04C) and place the pin (50) which joins the connecting rod (04C) to the actuator (10).
8. Place and tighten the screws (23F) which join the support (21) to the actuator (10).
9. Place the valve and fix it with the screws (23G) to the valve half-bodies (02).
10. Release the compressed air from the actuator.
11. Place the flanges (02A) to the half-bodies (02) and fix them with the screws (23).
12. Place the upper protectors (57) on the support (21) and fix them with the screws (23J).
13. Place the bottom leak detector (58) and the fixed bottom protector (57A) below de valve body (01) and fix it with the screw (23I).
14. Place the mobile bottom protector (57B) and adjust it with the screws (23K) to the fixed protector.

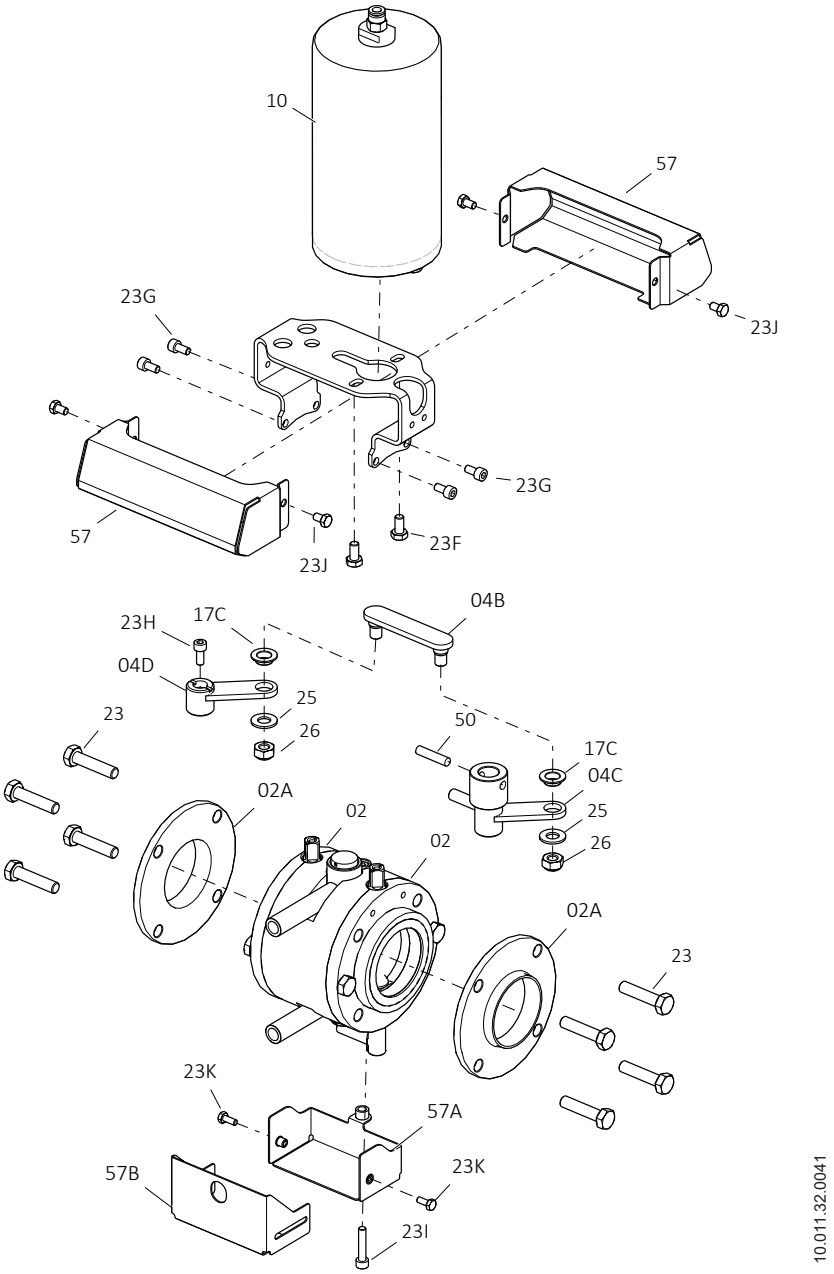
10
57
23J
23G
23G
57
23J
23F
04B
23H
17C
04D
25
26
23
50
17C
04C
25
26
02A
02
02
02A
23
23K
57A
57B
23K
23I
10.011.32.0041

8.8. DISASSEMBLY AND ASSEMBLY OF THE LEAK DETECTOR

If the valve comes supplied without a leak sensor and the customer installs a leak sensor not supplied by INOXPA, it must comply with the specifications of ATEX Directive 2014/34/EU.
Avoid removing the actuator in a zone defined as potentially explosive, since the valve disc will be left electrically isolated when the valve has no actuation.

8.8.1. Disassembly

1. Remove the pin (50) that joins the leak detector drive bushing (17C) to the body (01A).
2. Remove the drive bushing (17C) and the spring (06) through the leak detector upper part and the shaft (08) through the bottom part.
3. Remove the O-ring (20A) from the leak detector shaft (08).
4. Remove the O-ring (20D) from the drive bushing (17C).
5. Remove the O-rings (20C,20D) from the leak detector body (01A).

8.8.2. Assembly

1. Place the O-ring (20A) on the leak detector shaft (08).
2. Place the O-ring (20D) on the leak detector drive bushing (17C).
3. Place the O-rings (20C,20D) on the leak detector body (01A).
4. Pass the leak detector shaft (08) with its O-rings through the bottom part of the leak detector body (01A).
5. Place the spring (06) on the leak detector body (01A).
6. Place the leak detector drive bushing (17C) and pass the pin through its hole in a way that the shaft is fixed.
7. Put grease on the upper part of the leak detector drive bushing (17C).

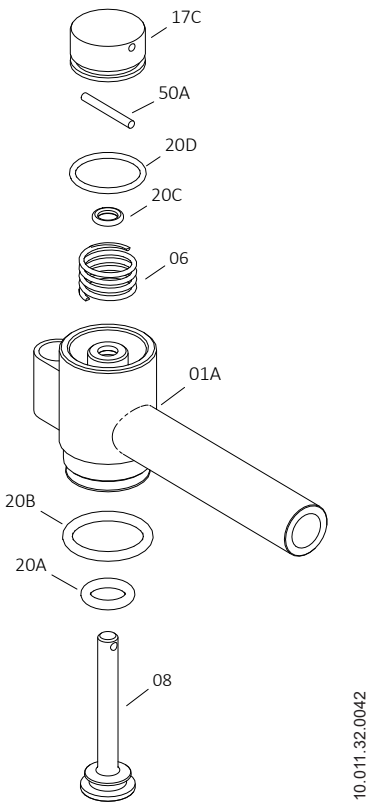

ATTENTION

Ensure that the upper part of the leak detectors (58) has grease

8.9. DISASSEMBLY AND ASSEMBLY OF THE ADAPTER KIT OF THE CONTROL HEAD C-TOP S

Check that the actuator is without pressure before starting the assembly or disassembly works.

8.9.1. Disassembly

1. Release the compressed air supply.
2. Remove the adapter and the air connection which are on the top part of the actuator
3. Screw the shaft (08A) on the top part of the piston with a 10 mm wrench.
4. Insert the adapter (13) supplied with the kit through the shaft (08A).
5. Place the seals (20B,20C,20D) on the core (55).
6. Insert the core (55) in the adapter (13) and screw it on the actuator with a 19 mm wrench.
7. Screw the air fitting (18) on the adapter (13).
8. Open the cover of the control head and fix it on the actuator with the two M5x10 screws.
9. Screw the magnet on the actuator shaft (08A).
10. Close the cover of the control head.

8.9.2. Assembly

1. Open the cover of the control head.
2. Unscrew the magnet of the actuator shaft (08A).
3. Unscrew the two M5x10 screws that fix the control head to the actuator.
4. Unscrew the core (55) with the help of a 19 mm wrench.
5. Remove the adapter (13).
6. Unscrew the shaft (08A) from the actuator with the help of a 10 mm wrench.

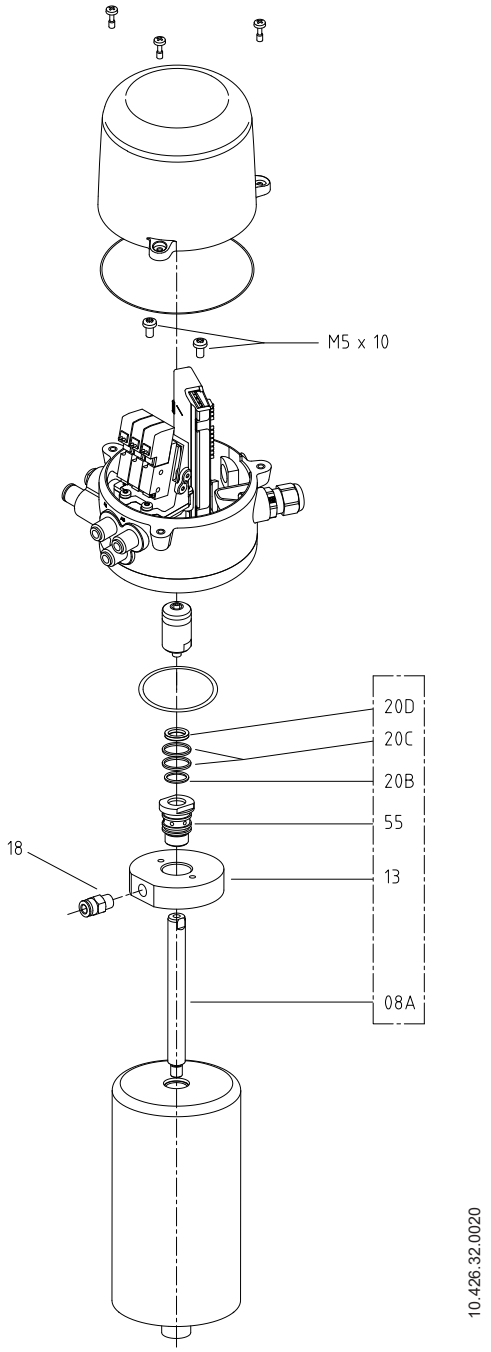

8.10. FITTING THE SEAT SEAL

Carry out the assembly with care avoiding any deterioration of the seat seal.
Make sure that the all parts are in perfect condition and free from any dirt.

1. Lubricate the disc shaft and the seat seal with the grease indicated in chapter 8.2.1. Maintenance of the seals.

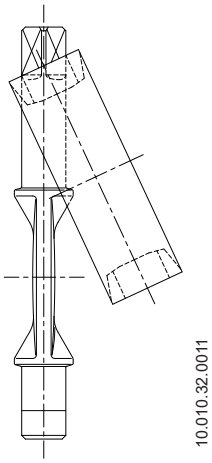

2. Insert the long disc spindle into one of the seal holes.

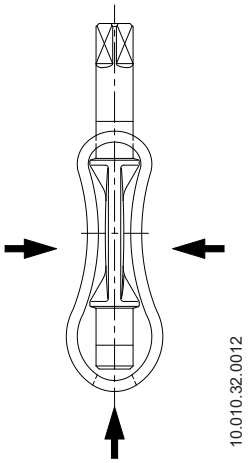

3. Stretch the seal as shown in the drawing, in such a way that it is possible to insert the short spindle in the free gasket hole.

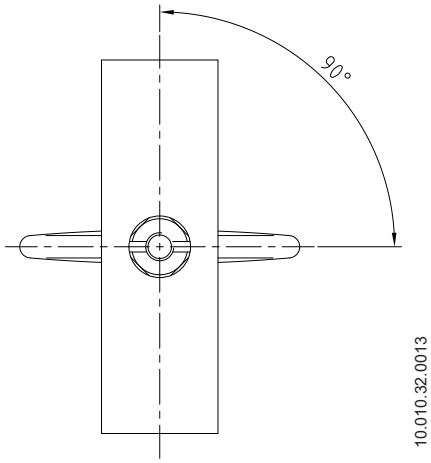

4. Turn the disc until it is perpendicular to the seal. This position facilitates its assembly in the body of the valve.

8.11. VALVE POSITION

To check if the valve is open or closed during the assembly, the disassembly or the replacement of the handle or the actuator the position of the shaft should be verified
At the upper part of the shaft there is a groove. It indicates the position of the valve:

- open valve: the groove is in line of the fluid circulation
- closed valve: the groove cuts the fluid circulation

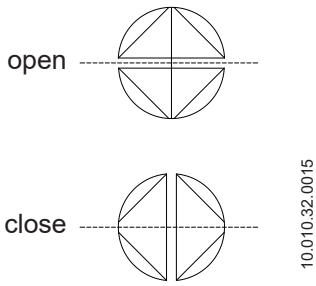

9. Technical Specifications

9.1. VALVE

Maximum working pressure	1000 kPa (10 bar)
Minimum working pressure	20 kPa (0,2 bar)
Maximum working temperature	121ºC (250ºF) EPDM seals (for highers temperatures other grades of seals will be used)

For the maximum temperature values in zones defined as potentially explosive, please see the marking in section 5.3. Identification of the valve.

9.2. ACTUATOR

The pneumatic actuator must not exceed 12 cycles per minute under any circumstances to ensure that there is no significant rise in temperature.

Compressed air pressure	600 - 800 kPa (6 - 8 bar)
Compressed air quality	Per ISO 8573-1:2010: - Solid particulate content: quality class 3, max. particle dimension 5 microns / max. particle density 5 mg/m^3. - Water content: quality class 4, max dew point +2ºC. If the valve is used at high altitude or under low ambient temperature conditions, the dew point must be adjusted accordingly. - Oil content: quality class 5, preferentially oil free, max. 25 mg oil per 1m^3 air.
Compressed air fitting	G 1/8

Compressed air consumption (litres N/cycle of P_{rel} = 6 bar)

Actuator	SE (single effect NC)
A940 - T1 Standard	1,3
A940 - T2 Standard	2,1
A940 - T2 Special	1,7
A940 - T3 Special	5,0

Valve	A940 - T1 STANDARD	A940 - T2 STANDARD	A940 - T2 SPECIAL	A940 - T3 SPECIAL
A470	DN 25	DN 40 a 50	DN 65	DN 80 a 100
	OD 1”	OD 1½” a 2	OD 2½”	OD 3” a 4”

9.3. MATERIALS

Parts in contact with the product	1.4404 (AISI 316L)
Body halves	1.4404 (AISI 316L)
Other steel parts	1.4307 (AISI 304L)
Seals in contact with the product	EPDM, FPM, HNBR
Internal surface finish	Ra ≤ 0,8 µm
External surface finish	Mechanized

9.4. SIZES AVAILABLE

DIN EN 10357 serie A (formerly DIN 11850 series 2)	DN 25 - DN 100 (SMS 104)
ASTM A269/270 (correspond to tubo OD)	OD 1’’ - OD 4’’ (SMS 25 - SMS 101,6)
Connections	Weld, male, nut, clamp

9.6. TIGHTENING TORQUE

Valve size	Fixed spanner	Tightening torque (Nm)
DN 25 a 100	13	42
OD 1’’ a 4’’	13	42

9.5. WEIGHT OF THE LEAKAGE BUTTERFLY VALVE BETWEEN FLANGES A470

	WEIGHT (kg)				
	DN	Valve[1]	Two positions handle[2]	Actuator[2]	Actuator + C-TOP S[2]
DIN	**25**	3,7	4,4	6,8	7,5
	40	4,6	5,4	8,8	9,4
	50	5,6	6,3	9,7	10,3
	65	7,0	7,8	11,2	11,8
	80	8,5	9,3	18,4	19,0
	100	10,5	11,3	20,4	21,0
OD	**1’’**	3,3	4,1	6,4	7,1
	1½’’	4,2	4,9	8,3	8,9
	2’’	5,1	5,8	9,2	9,8
	2½’’	5,9	6,7	10,1	10,7
	3’’	7,1	7,9	17,0	17,6
	4’’	10,8	11,6	20,7	21,3

1) connection weld/weld
2) weight of the valve and drive

9.7. DIMENSIONS OF THE LEAKAGE BUTTERFLY VALVE BETWEEN FLANGES A470 WITH MANUAL DRIVE

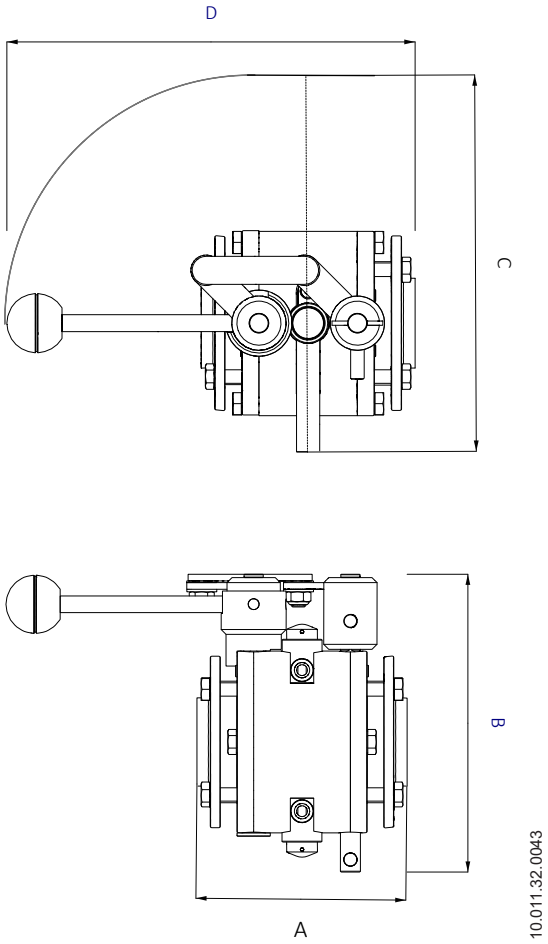

	DN	Dimensions			
		A	B	C	D
DIN	25	126	151	222	238
	40	126	166	222	238
	50	126	178	222	238
	65	126	195	251	267
	80	130	209	251	269
	100	130	228	251	269
OD	1”	126	147	222	238
	1½”	126	162	222	238
	2”	126	175	222	238
	2½”	126	187	251	267
	3”	130	199	251	269
	4”	130	228	251	269

9.8. DIMENSIONS OF THE LEAKAGE BUTTERFLY VALVE BETWEEN FLANGES A470 WITH PNEUMATIC DRIVE

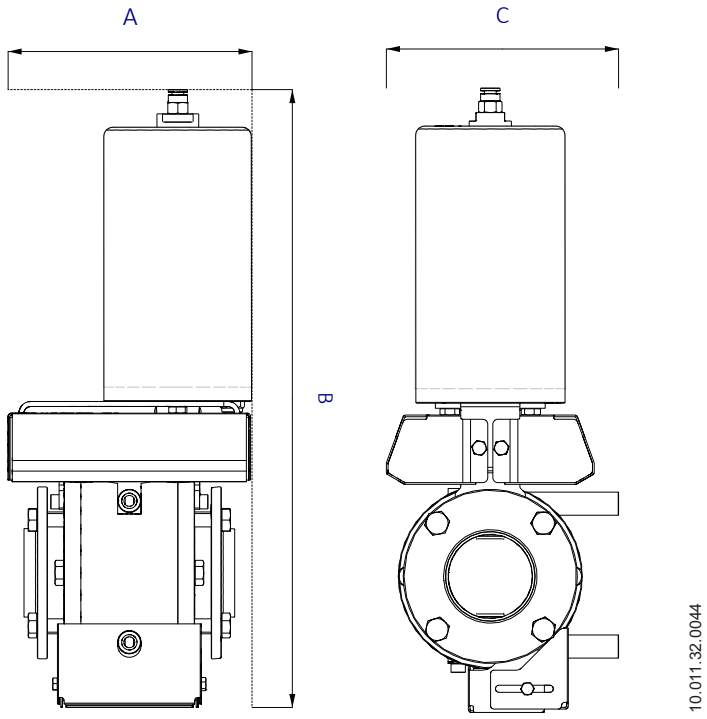

	DN	Dimensions		
		A	B	C
DIN	25	145	306	138
	40	146	343	138
	50	146	355	138
	65	146	372	138
	80	169	437	138
	100	169	455	138
OD	1”	145	302	138
	1½”	146	339	138
	2”	146	352	138
	2½”	146	364	138
	3”	169	427	138
	4”	169	455	138

9.9. DIMENSIONS OF THE LEAKAGE BUTTERFLY VALVE A470 WITH PNEUMATIC DRIVE AND C-TOP S

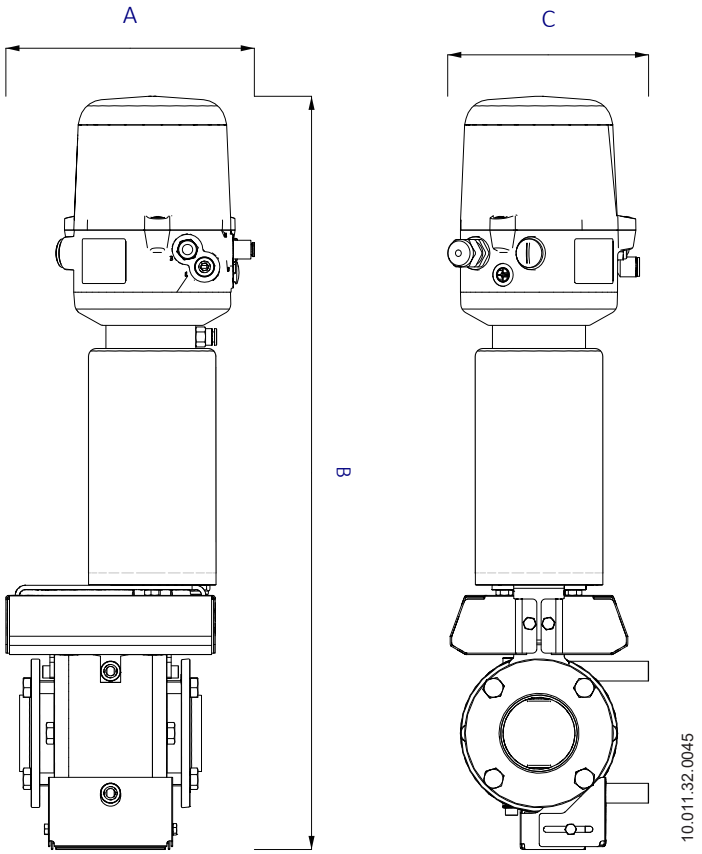

	DN	Dimensions		
		A	B	C
DIN	25	156	473	138
	40	156	510	138
	50	156	522	138
	65	156	539	138
	80	156	604	138
	100	156	622	138
OD	1”	156	469	138
	1½”	156	506	138
	2”	156	519	138
	2½”	156	531	138
	3”	156	594	138
	4”	156	622	138

9.10. EXPLODED DRAWING AND PARTS LIST OF THE LEAKAGE BUTTERFLY VALVE BETWEEN FLANGES A470

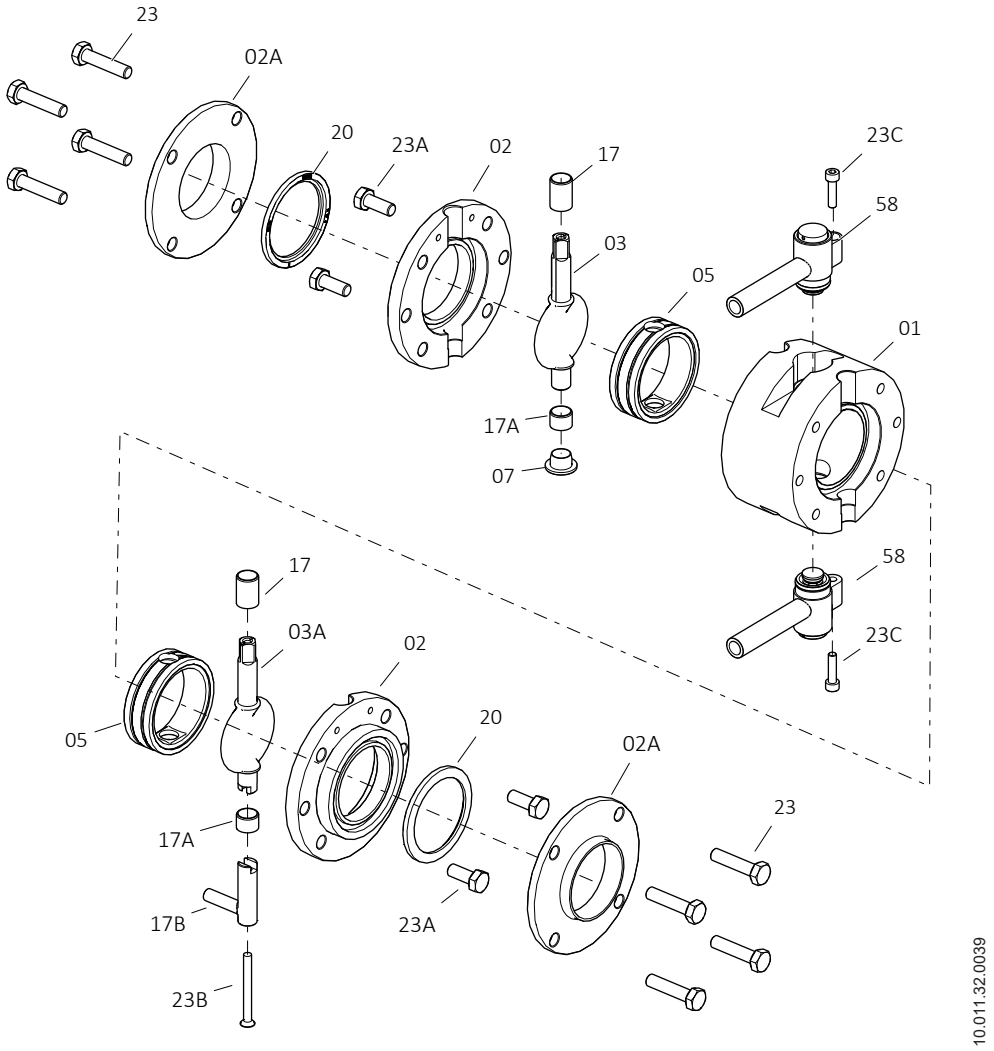

Position	Description	Quantity	Material
01	body	1	1.4404 (AISI 316L)
02	half-bodies	2	1.4404 (AISI 316L)
02A	flanges	2	1.4404 (AISI 316L)
03	disc[1]	1	1.4404 (AISI 316L)
03A	disc[1]	1	1.4404 (AISI 316L)
05	seat seal[1]	2	EPDM-FPM
07	guide bushing	1	plastic
17	guide bushing[1]	2	Iglidur G
17A	guide bushing[1]	2	Iglidur G
17B	bottom actuation	1	1.4307 (AISI 304L)
20	half-bodies seal[1]	2	EPDM-FPM
23	hexagonal screw	8	A2
23A	hexagonal screw	4	A2
23B	countersunk head screws	1	A2
23C	allen screw leak detector	2	A2
58	leakage detector	2	1.4404 (AISI 316L) / EPDM

1) Recommended spare parts

9.11. EXPLODED DRAWING AND PARTS LIST OF THE MANUAL DRIVE

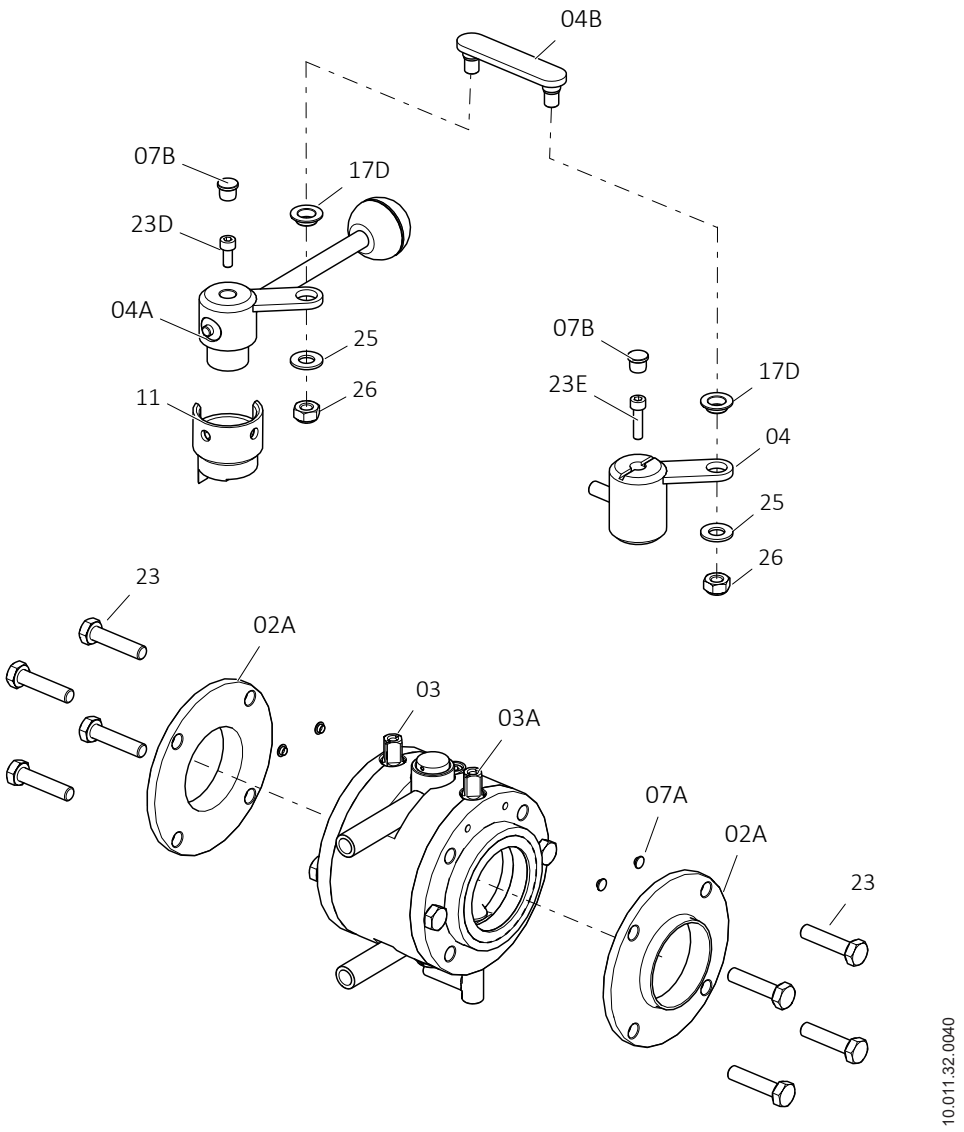

Position	Description	Quantity	Material
04	manual connecting rod	1	1.4307 (AISI 304L)
04A	handle connecting rod	1	1.4307 (AISI 304L) + plástico
04B	drive arm	1	1.4307 (AISI 304L)
07A	plug	4	plastic
07B	plug	2	plastic
11	handle guide	1	1.4307 (AISI 304L)
17D	bushing	2	Iglidur G
23D	allen screw	1	A2
23E	allen screw	1	A2
25	washer	2	1.4301 (AISI 304)
26	nut	2	A2

9.12. EXPLODED DRAWING AND PARTS LIST OF THE PNEUMATIC DRIVE

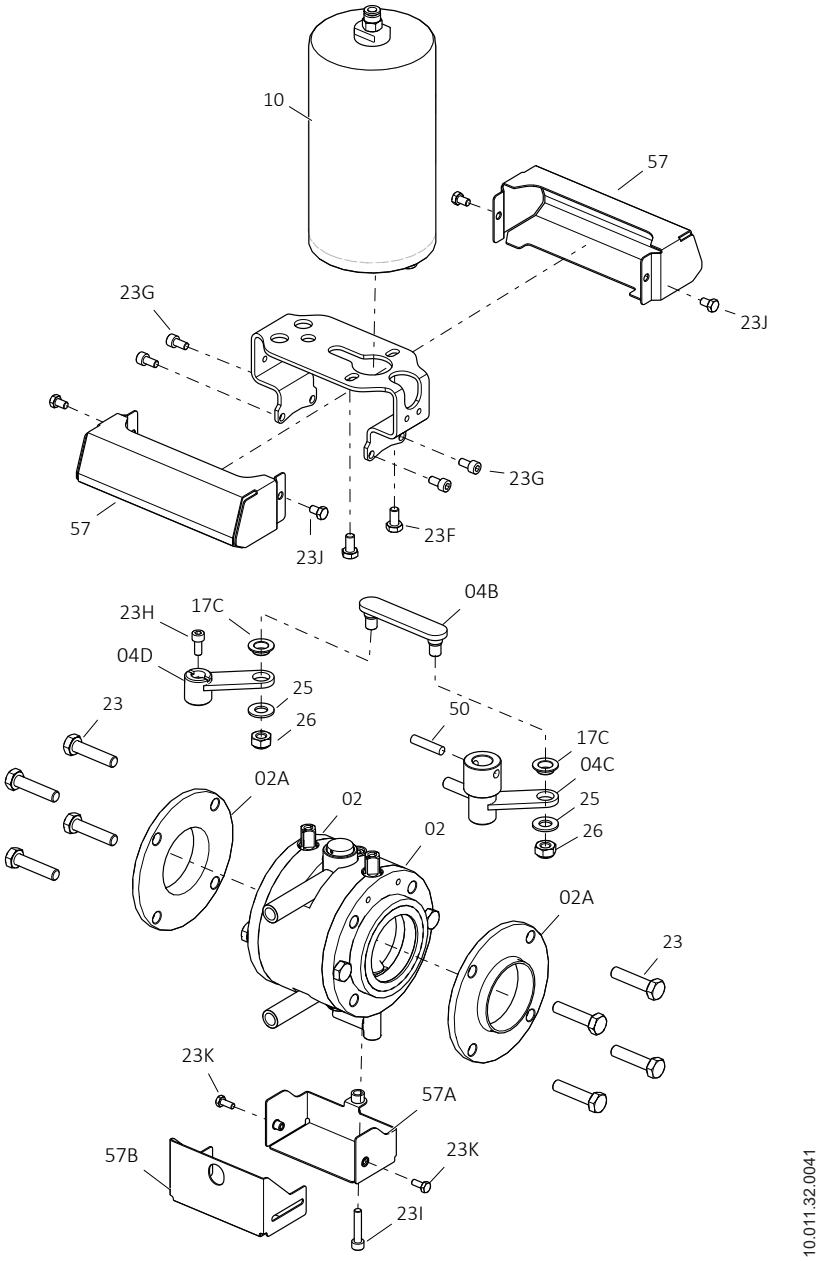

Position	Description	Quantity	Material
04C	actuator connecting rod	1	1.4307 (AISI 304L)
04D	connecting rod	1	1.4307 (AISI 304L)
04B	drive arm	1	1.4307 (AISI 304L)
10	actuator	1	1.4307 (AISI 304L)
17C	bushing	2	Iglidur G
21	actuator support	1	1.4307 (AISI 304L)
23G	allen screw	4	A2
23F	hexagonal screw	2	A2
23H	allen screw	1	A2
23I	allen screw	1	A2
23J	hexagonal screw	4	A2
23K	hexagonal screw	2	A2

Position	Description	Quantity	Material
25	washer	2	1.4301 (AISI 304)
26	nut	2	A2
50	pin	1	A2
57	upper protection	2	1.4307 (AISI 304L)
57A	fixed bottom protection	1	1.4307 (AISI 304L)
57B	mobile bottom protection	1	1.4307 (AISI 304L)

9.13. EXPLODED DRAWING AND PARTS LIST OF THE LEAK DETECTOR

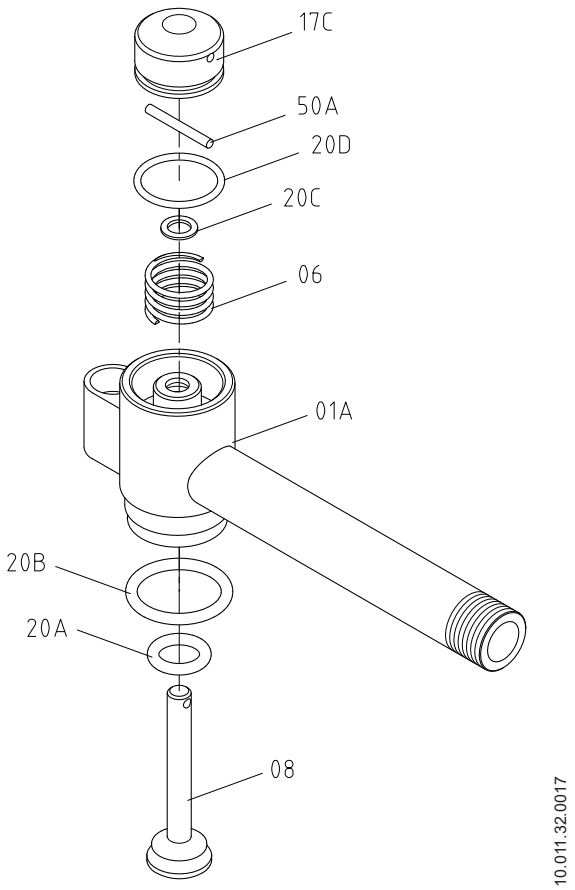

Position	Description	Quantity	Material
01A	leak detector body	1	1.4404 (AISI 316L)
06	spring	1	1.4310 (AISI 301)
08	shaft	1	1.4404 (AISI 316L)
17C	drive bushing[1]	1	1.4307 (AISI 304L)
20A	shaft O-ring[1]	1	EPDM
20B	shaft O-ring[1]	1	EPDM
20C	drive bushing O-ring[1]	1	EPDM
20D	drive bushing O-ring[1]	1	EPDM
50A	pin	1	A2

1) Recommended spare parts

NOTES

NOTES

How to contact INOXPA S.A.U.:
Contact details for all countries are continaually updated on our website.
Please visit www.inoxpa.com to access the information.

INOXPA S.A.U.
Telers, 60 - 17820 - Banyoles - Spain

10.011.30.02EN · (C) 2026/06